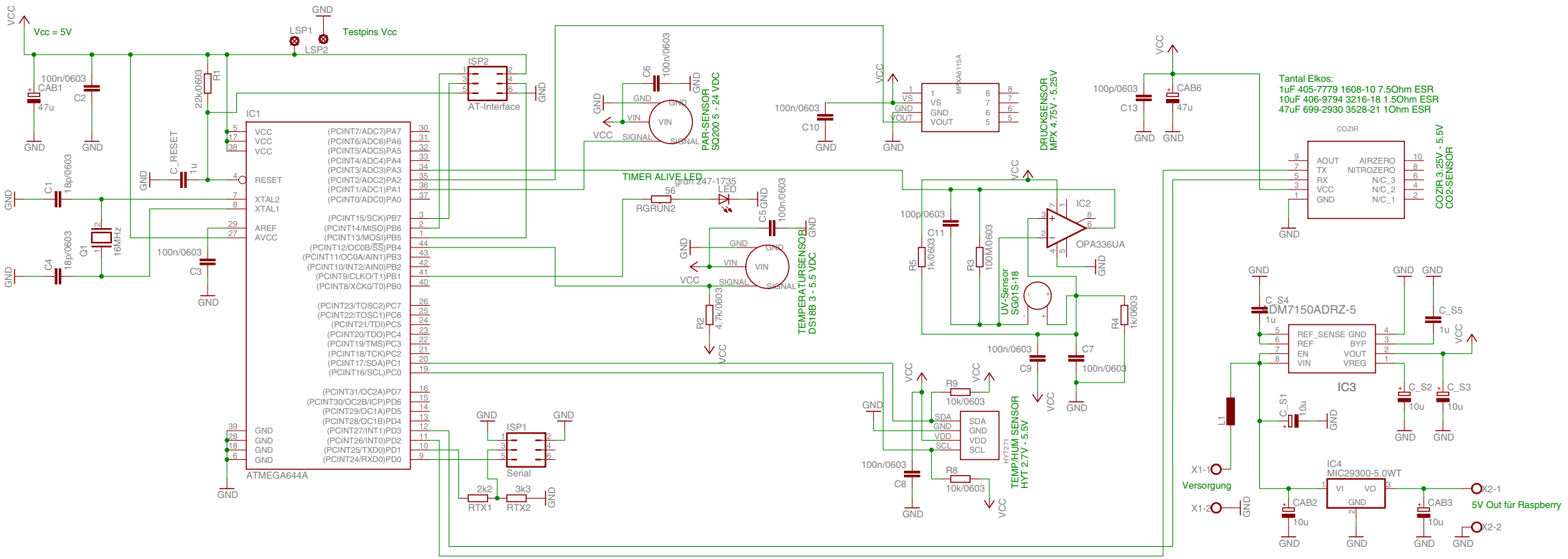
Vcc = 5V
Testpins Vcc
LSP1
LSP2
CAB1
47u
C2
100n/0603
R1
22k/0603
C_RESET
1u
C1
18p/0603
C4
18p/0603
Q1
16MHz
C3
100n/0603
IC1
ATMEGA644A
VCC
VCC
VCC
RESET
XTAL2
XTAL1
AREF
AVCC
GND
GND
GND
GND
(PCINT7/ADC7)PA7
(PCINT6/ADC6)PA6
(PCINT5/ADC5)PA5
(PCINT4/ADC4)PA4
(PCINT3/ADC3)PA3
(PCINT2/ADC2)PA2
(PCINT1/ADC1)PA1
(PCINT0/ADC0)PA0
(PCINT15/SCK)PB7
(PCINT14/MISO)PB6
(PCINT13/MOSI)PB5
(PCINT12/OC0B/SS)PB4
(PCINT11/OC0A/AIN1)PB3
(PCINT10/INT2/AIN0)PB2
(PCINT9/CLKO/T1)PB1
(PCINT8/XCK0/T0)PB0
(PCINT23/TOSC2)PC7
(PCINT22/TOSC1)PC6
(PCINT21/TDI)PC5
(PCINT20/TDO)PC4
(PCINT19/TMS)PC3
(PCINT18/TCK)PC2
(PCINT17/SDA)PC1
(PCINT16/SCL)PC0
(PCINT31/OC2A)PD7
(PCINT30/OC2B/ICP)PD6
(PCINT29/OC1A)PD5
(PCINT28/OC1B)PD4
(PCINT27/INT1)PD3
(PCINT26/INT0)PD2
(PCINT25/TXD0)PD1
(PCINT24/RXD0)PD0
ISP2
AT-Interface
ISP1
Serial
2k2
RTX1
3k3
RTX2
C6
100n/0603
PAR-SENSOR
SQ200 5 - 24 VDC
VIN
SIGNAL
TIMER ALIVE LED
grün 247-1735
LED
RGRUN2
56
C5
100n/0603
TEMPERATURSENSOR
DS18B 3 - 5.5 VDC
R2
4.7k/0603
C10
100n/0603
MPX6115A
VS
GND
VOUT
DRUCKSENSOR
MPX 4.75V - 5.25V
C13
100p/0603
CAB6
47u
Tantal Elkos:
1uF 405-7779 1608-10 7.5Ohm ESR
10uF 406-9794 3216-18 1.5Ohm ESR
47uF 699-2930 3528-21 1Ohm ESR
COZIR
AOUT
TX
RX
VCC
GND
AIRZERO
NITROZERO
N/C_3
N/C_2
N/C_1
COZIR 3.25V - 5.5V
CO2-SENSOR
C11
100p/0603
R5
1k/0603
R3
100M/0603
IC2
OPA336UA
UV-Sensor
SG01S-18
R4
1k/0603
C9
100n/0603
C7
100n/0603
R9
10k/0603
SDA
GND
VDD
SCL
HYT221
TEMP/HUM SENSOR
HYT 2.7V - 5.5V
C8
100n/0603
R8
10k/0603
C_S4
1u
DM7150ADRZ-5
REF_SENSE
REF
EN
VIN
GND
BYP
VOUT
VREG
IC3
C_S5
1u
C_S1
0u
C_S2
10u
C_S3
10u
L1
X1-1
Versorgung
X1-2
IC4
MIC29300-5.0WT
VI
VO
CAB2
10u
CAB3
10u
X2-1
5V Out für Raspberry
X2-2